Embedded Systems INSTITUTE

Validating UML models of Embedded Systems by Coupling Tools

B∮de-RC

Jozef Hooman

OMEGA
IST-2001-33522

Embedded Systems Institute, Eindhoven
University of Nijmegen

Nataliya Mulyar, Ladislau Posta

Eindhoven University of Technology

The Netherlands

SVERTS, 11 October 2004

Overview

- Context, motivation; Boderc project
- Aim of this work
- Tool overview
  - Rose RealTime of IBM/Rational
  - Matlab/Simulink of The Mathworks
- Main concepts of the coupling
- Concluding remarks

CIP: Océ, produces document printing systems

Multi-disciplinairy development of software-controlled machines

Typically (sometimes conflicting) requirements on throughput, reliability, costs, power consumption, temperature, noise, etc.

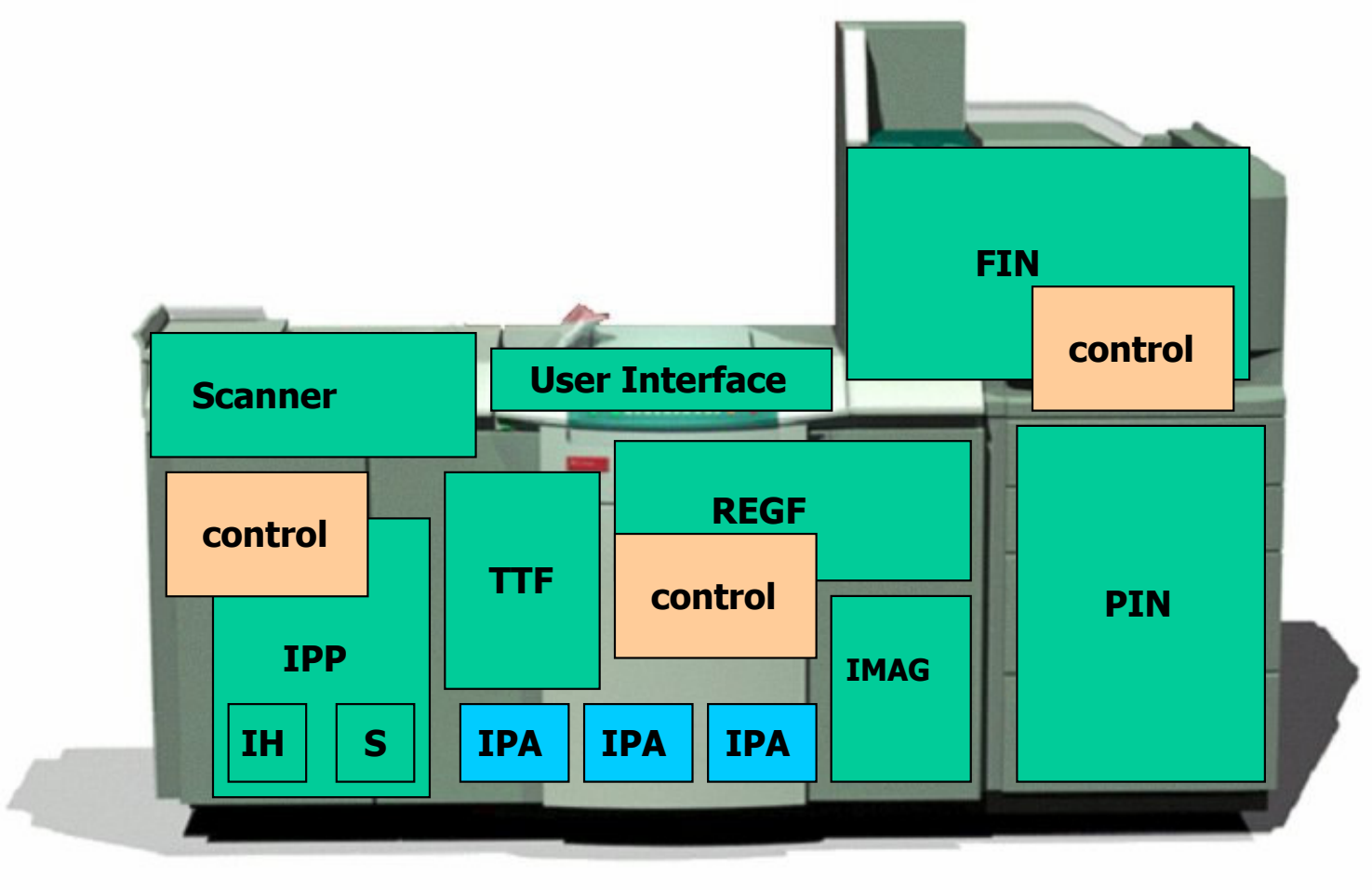

Multi-disciplinary development

Current development often rather sequential

Mechanical Engineering ;

Electrical Engineering ;

Software Engineering

- **Decisions/changes in one discipline may cause problems in other disciplines**
- **Often leads to non-optimal solutions**

BODERC project: project partners from different disciplines (M,E,S) work together on topics such as

- **multi-disciplinairy design space exploration**
- **predict consequences of design decisions asap**

Main idea: use high-level models

Modeling tools at Océ

Software modeled in Rose RealTime (Rose-RT)

- **Executable UML models, code generation, based on specific run-time system**
- **Models can be executed, event flow can be presented as a Sequence Diagram**
- **At Océ: reusable software architecture in Rose-RT**

Mechanical design partly in Matlab/Simulink

- **Interconnected (discrete of continuous) blocks**
- **Behaviour can be simulated using solvers**
- **At Océ: used to model parts of abstracted mechanical behaviour**

Aim

Combine tools of different disciplines to allow simultaneous simulation; here Rose-RT and Simulink

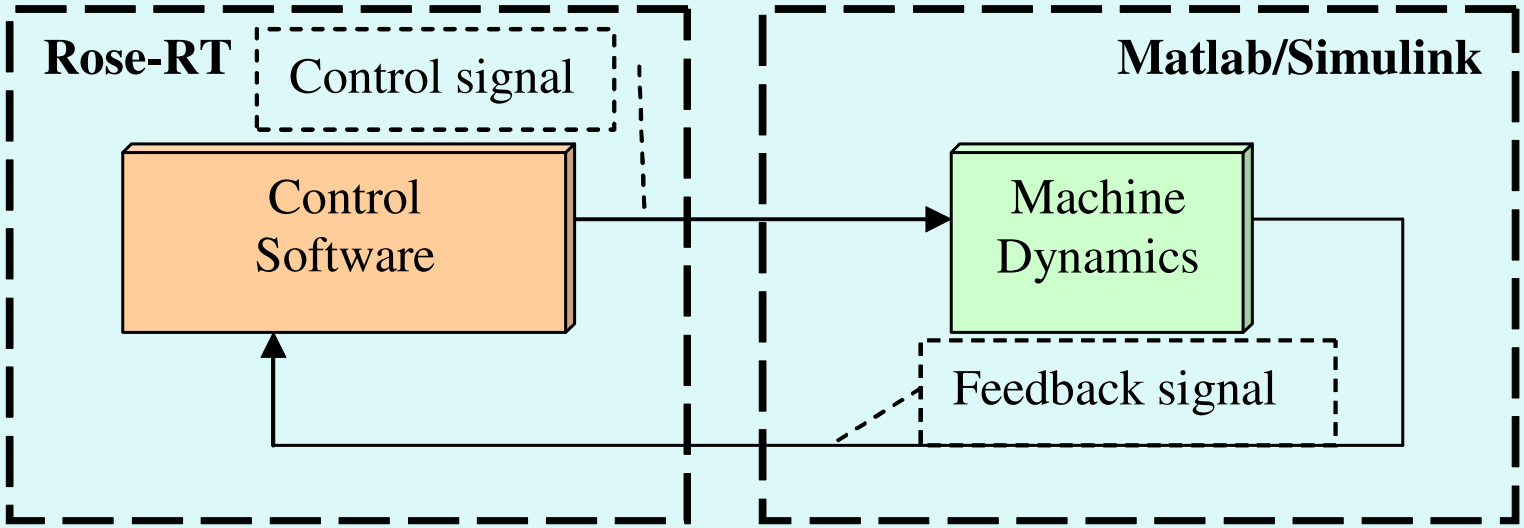

Challenges:

- **Conceptual:** e.g. different notions of time & data
- **Technical:** implement connection between tools

Rose-RT

Capules:
active objects,
message-based
communication via
ports

transitions triggered by
messages or time-outs

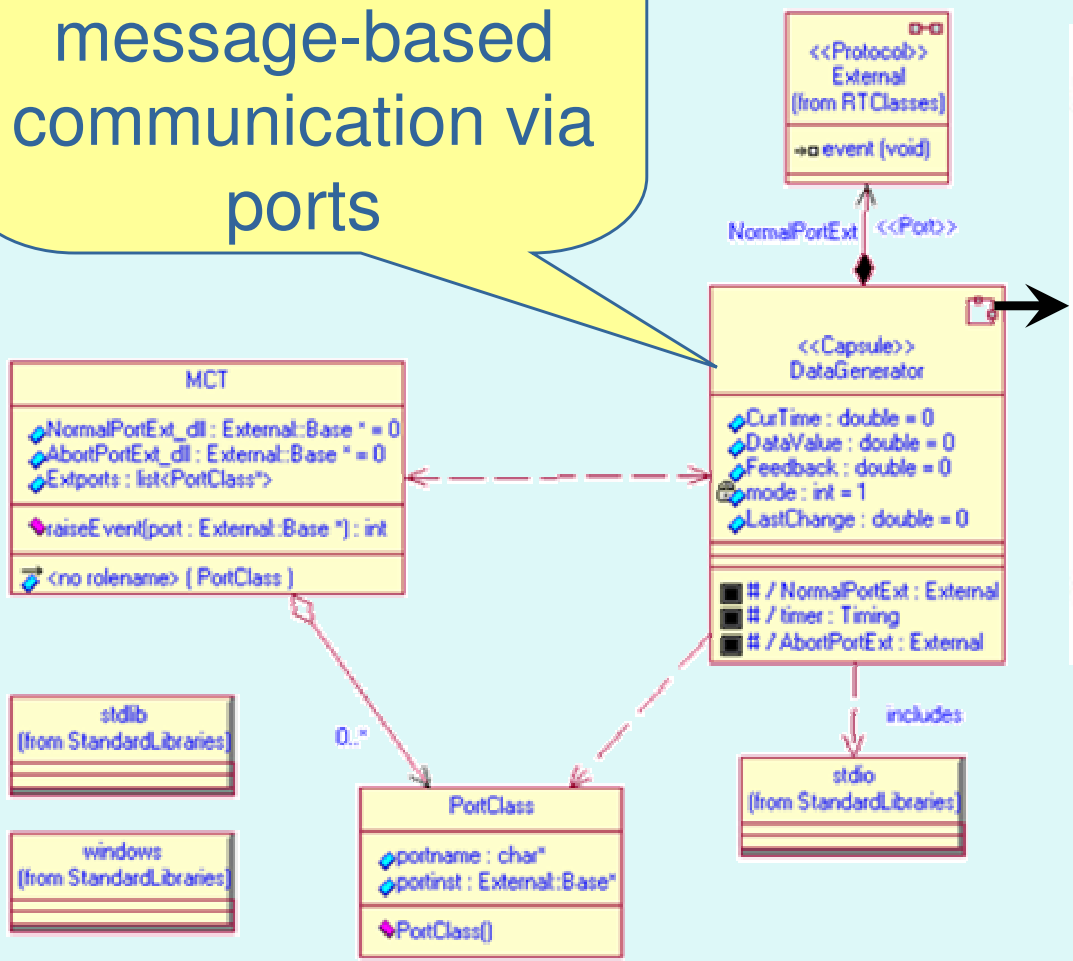

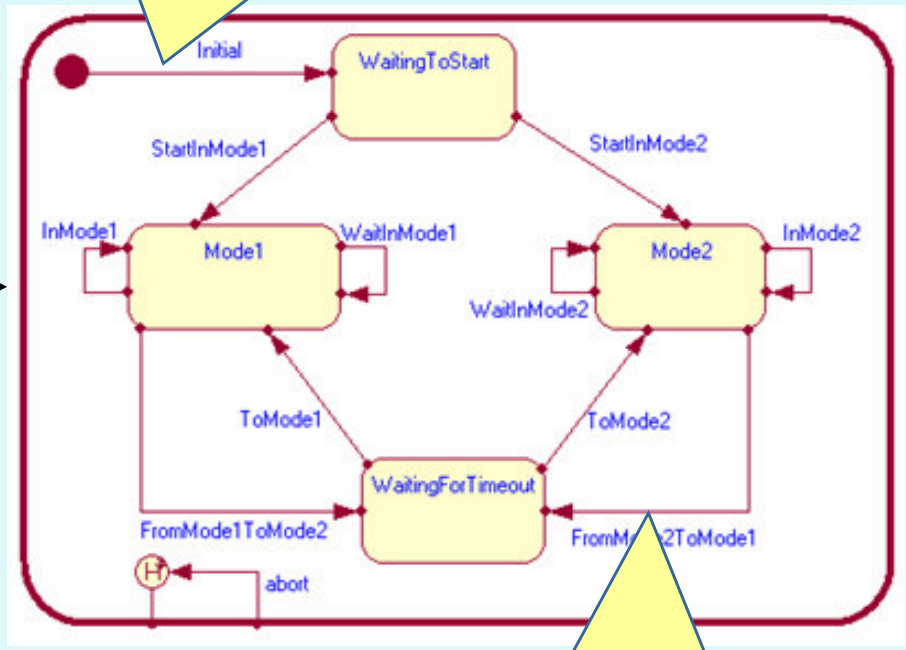

actions on transitions
may send messages
or set timers

Rose-RT

Tool can generate code based on Service Layer, with e.g. Timing Service

Implementation of Service layer depends on target platform, e.g. Timing Service depends on granularity of underlying operating system

Two ways to test generated code:

1. Run executable model on intended platform
2. Execute model step-by-step to check
   reactive response to messages,
   correct timing is not guaranteed

Step: processing next message with highest priority

Matlab/Simulink

$F = m \cdot a \qquad a = F/m \qquad \text{motor position } \varphi = \iint a$

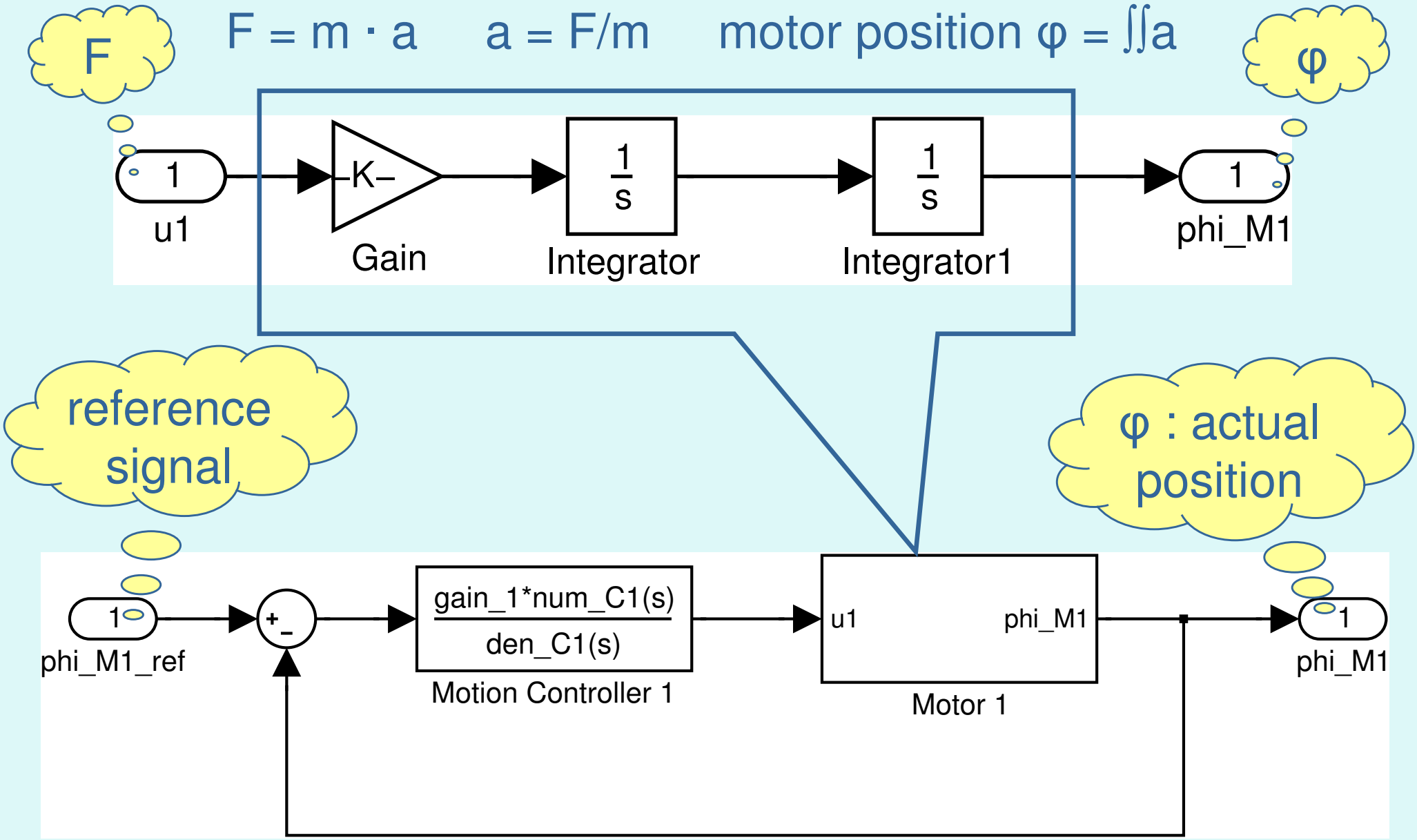

Matlab/Simulink

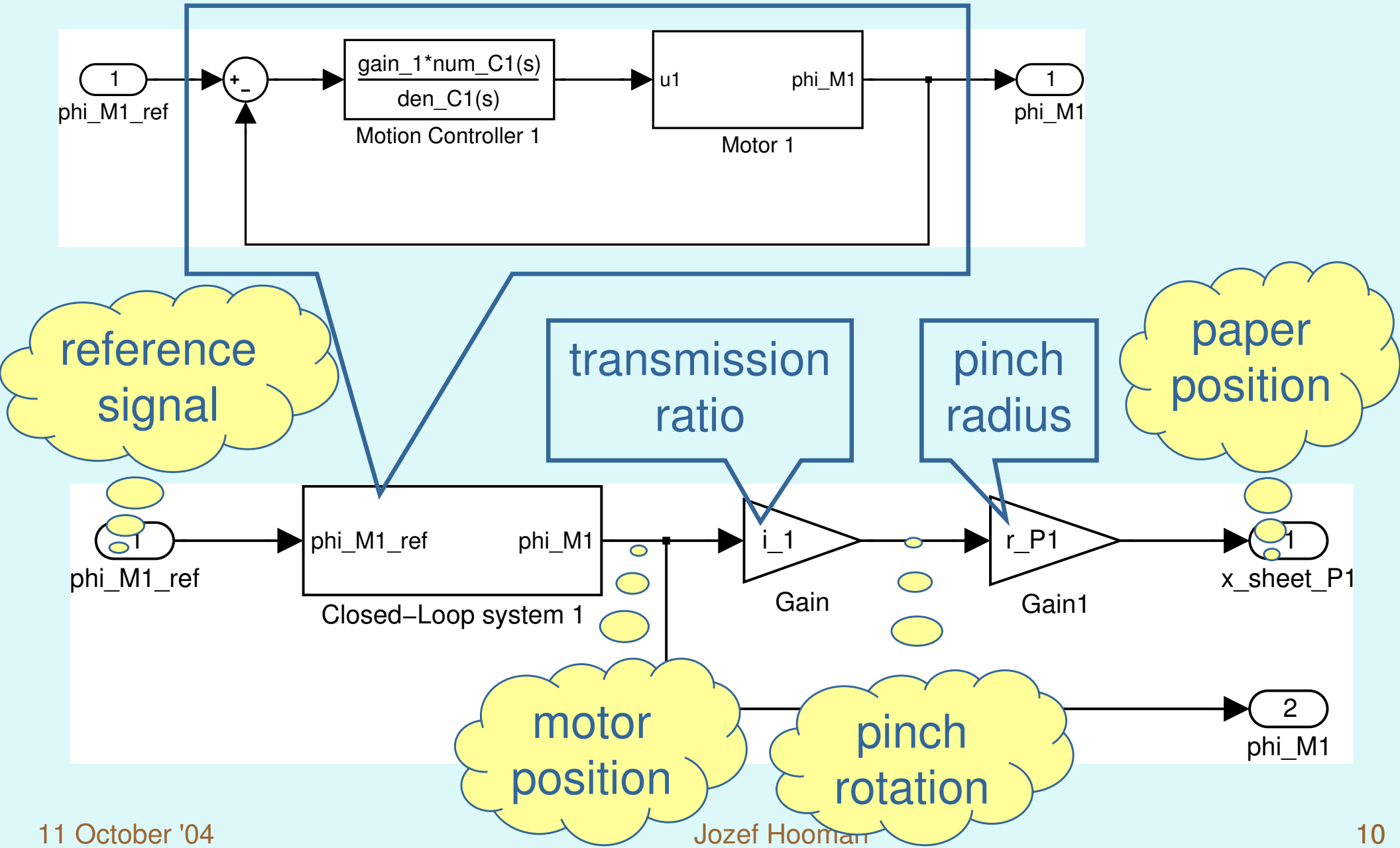

Matlab/Simulink

Simulation: compute at certain intervals,
using a notion of **simulation time**,
outputs, inputs and internal states
(which may have discrete and continuous part)
of all blocks

Solver: computes next states, for continuous part
using certain numerical integration method

Step size (length of interval) can be fixed of variable

Main concepts

Notion of time

Timing of Rose-RT models:

- **strongly coupled to timing service of operating system on which model is running**
- **not respected in step-by-step simulation**

Decision: use notion of simulated time of Simulink

Assumption: information about execution time of transitions is available, reflecting assumption about underlying target platform

Architectural Concept

Decision: loose coupling via separate Multidisciplinary Coupling Tool (MCT)

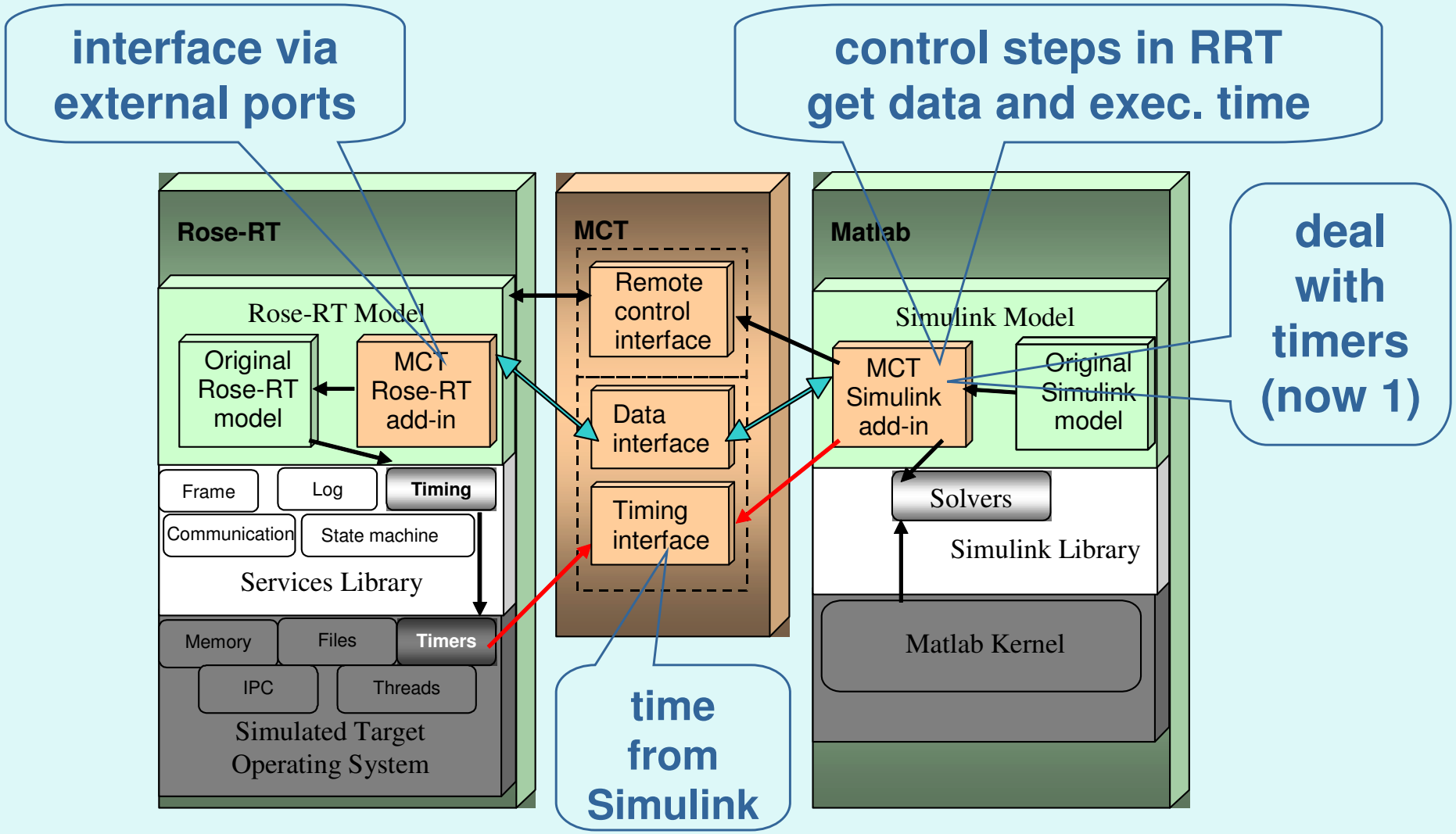

Sequence Diagram

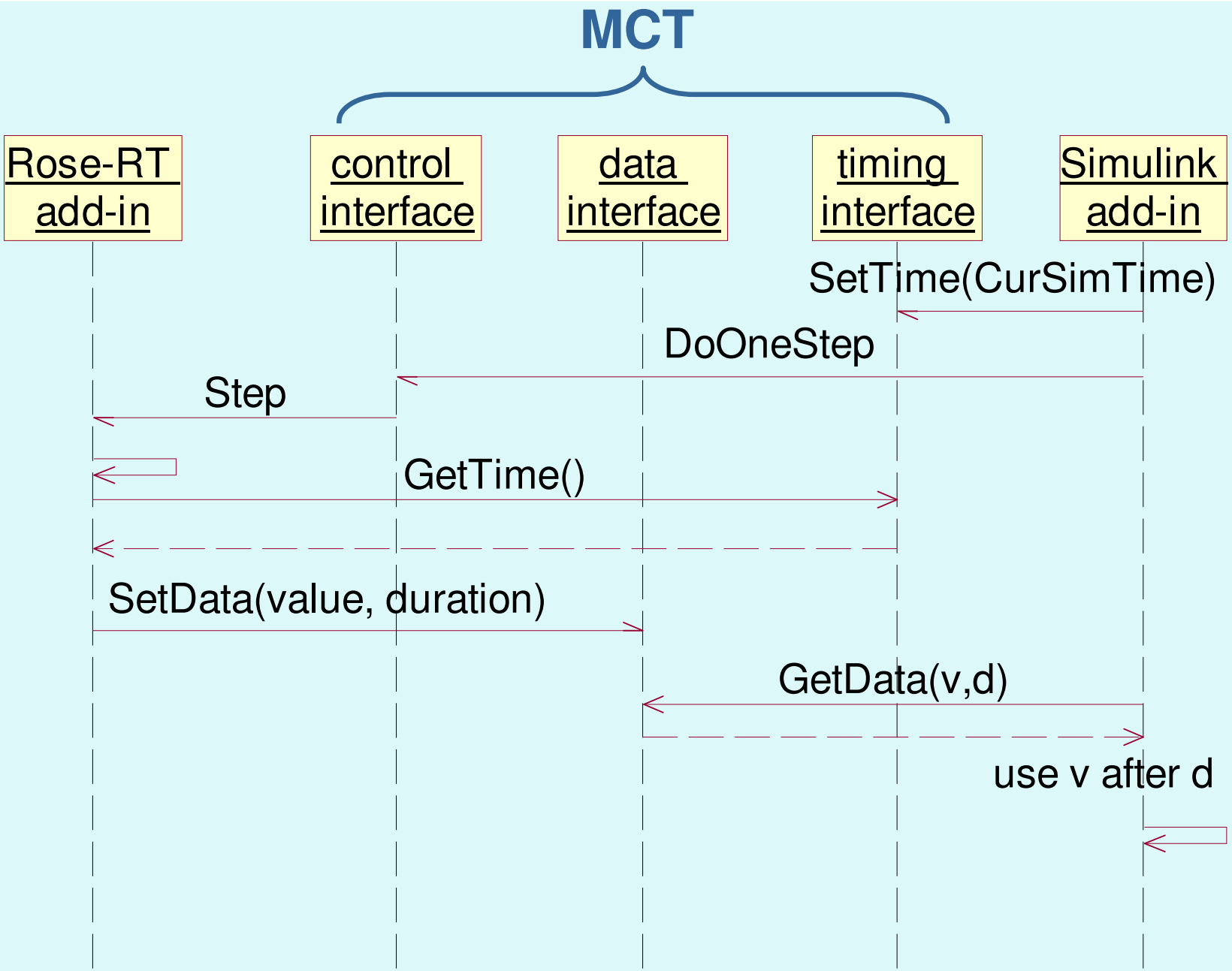

Simulink add-in

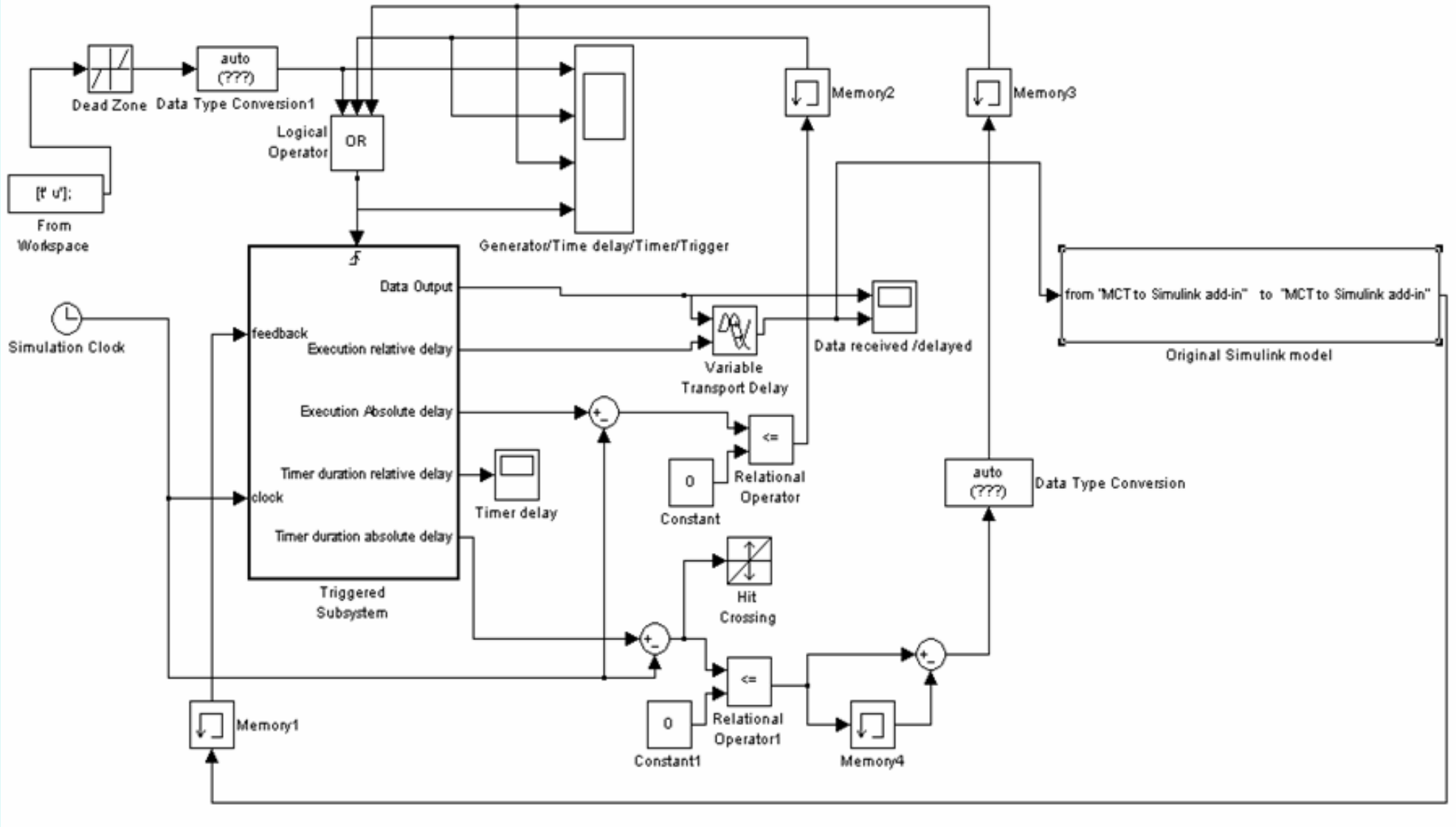

Triggered Subsystem

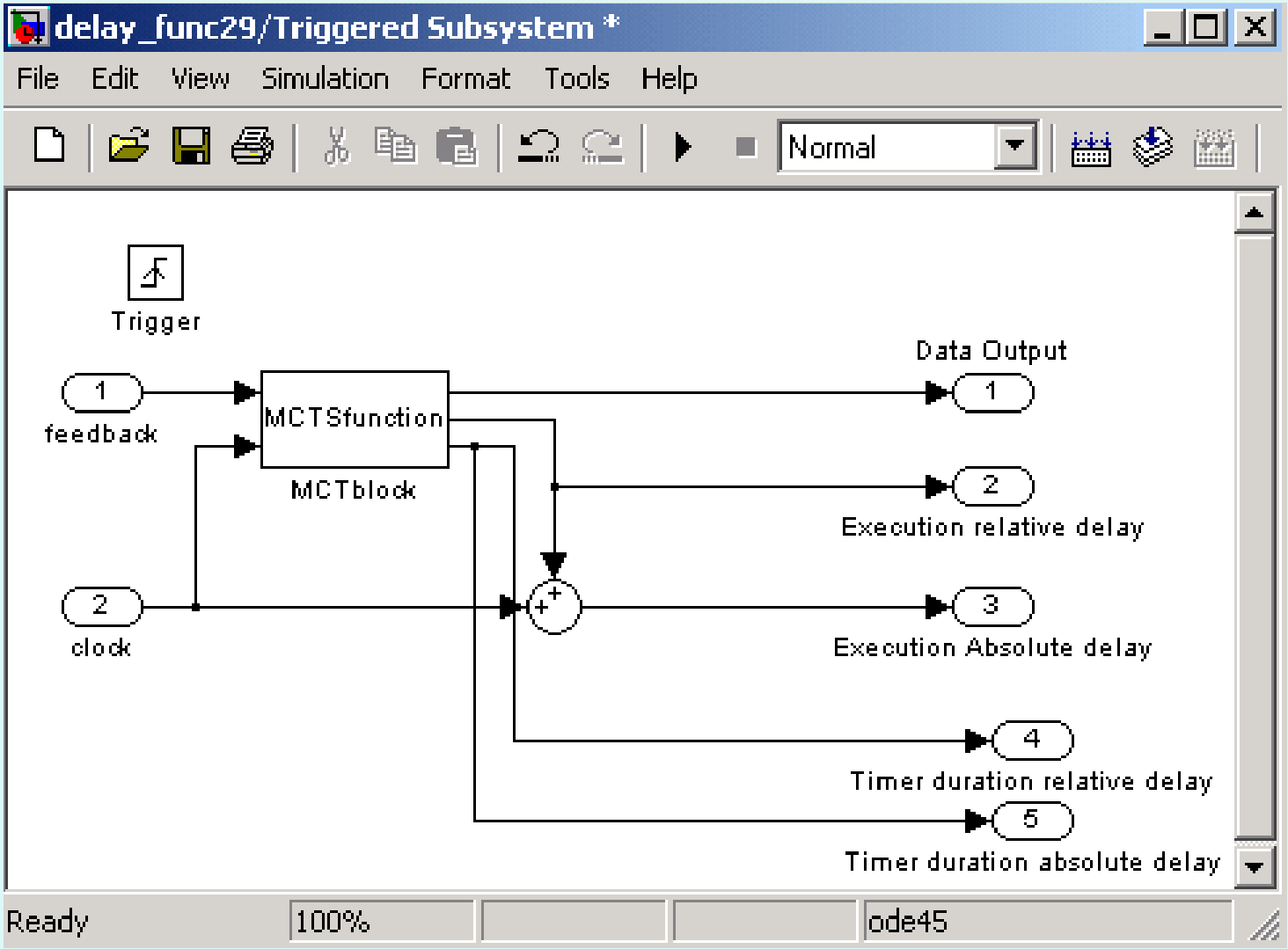

MCTSfunction implemented by S-function

Concluding Remarks

First prototype, tested on very small examples

TO DO:

- **Experiment with larger & industrial examples**
- **Test extension with multiple timers**
- **Investigate multiple threads in Rose-RT**
- **Experiment with various solvers**
- **Try simulation on multiple PCs**
- **Use TrueTime to model part of software within Matlab or network delays**